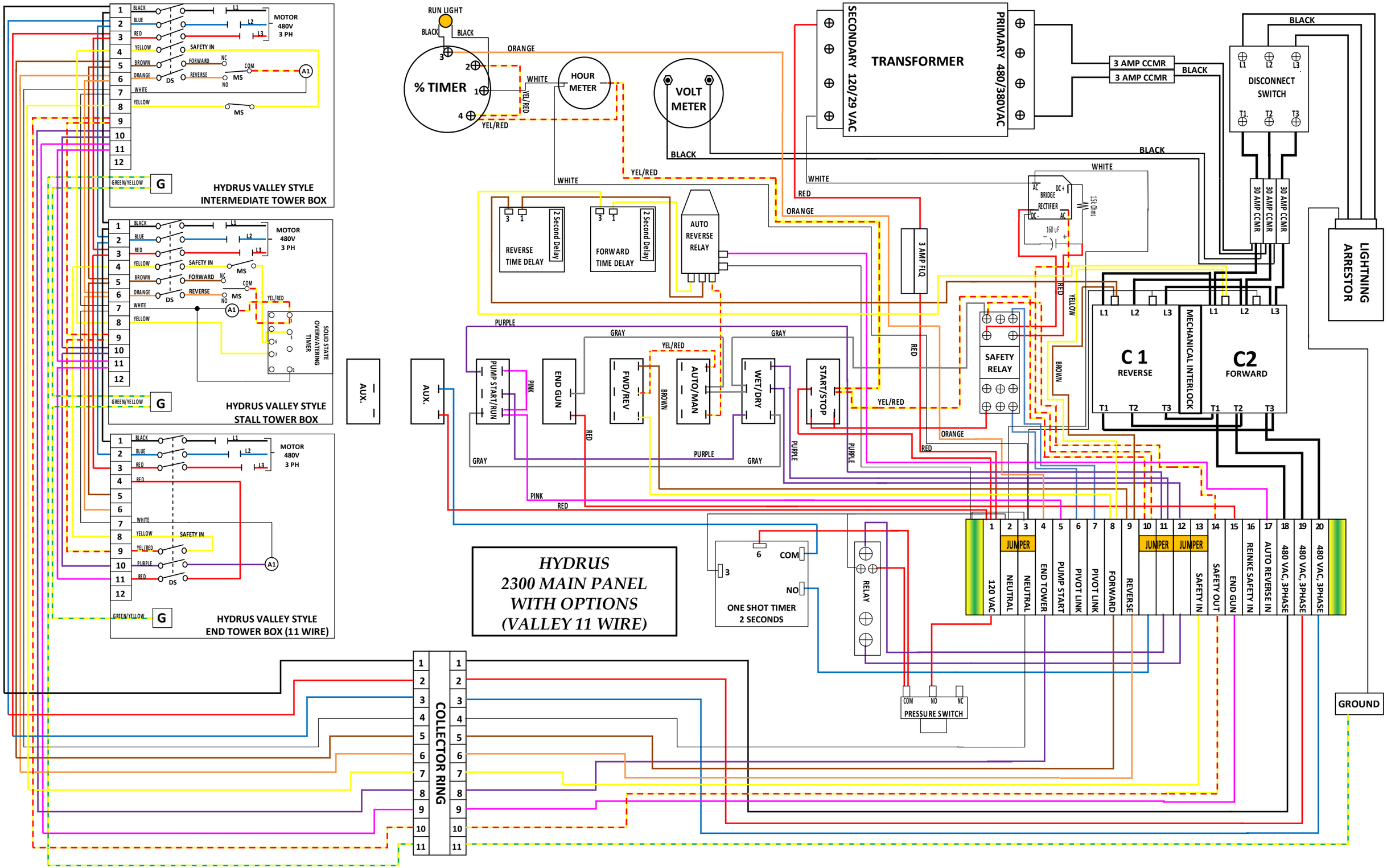
HYDRUS VALLEY STYLE INTERMEDIATE TOWER BOX
HYDRUS VALLEY STYLE STALL TOWER BOX
HYDRUS VALLEY STYLE END TOWER BOX (11 WIRE)
MOTOR 480V 3 PH
SAFETY IN
FORWARD
REVERSE
SOLID STATE OVERWATERING TIMER
RUN LIGHT
% TIMER
HOUR METER
VOLT METER
TRANSFORMER
SECONDARY 120/29 VAC
PRIMARY 480/380VAC
3 AMP CCMR
DISCONNECT SWITCH
30 AMP CCMR
LIGHTNING ARRESTOR
REVERSE TIME DELAY
FORWARD TIME DELAY
2 Second Delay
AUTO REVERSE RELAY
3 AMP FLQ
BRIDGE RECTIFIER
160 uF
15K Ohms
SAFETY RELAY
C 1 REVERSE
C2 FORWARD
MECHANICAL INTERLOCK
AUX.
PUMP START/RUN
END GUN
FWD/REV
AUTO/MAN
WET/DRY
START/STOP
ONE SHOT TIMER 2 SECONDS
RELAY
PRESSURE SWITCH
COM
NO
NC
JUMPER
120 VAC
NEUTRAL
END TOWER
PUMP START
PIVOT LINK
FORWARD
REVERSE
SAFETY IN
SAFETY OUT
END GUN
REINKE SAFETY IN
AUTO REVERSE IN
480 VAC, 3PHASE
GROUND
COLLECTOR RING
HYDRUS 2300 MAIN PANEL WITH OPTIONS (VALLEY 11 WIRE)