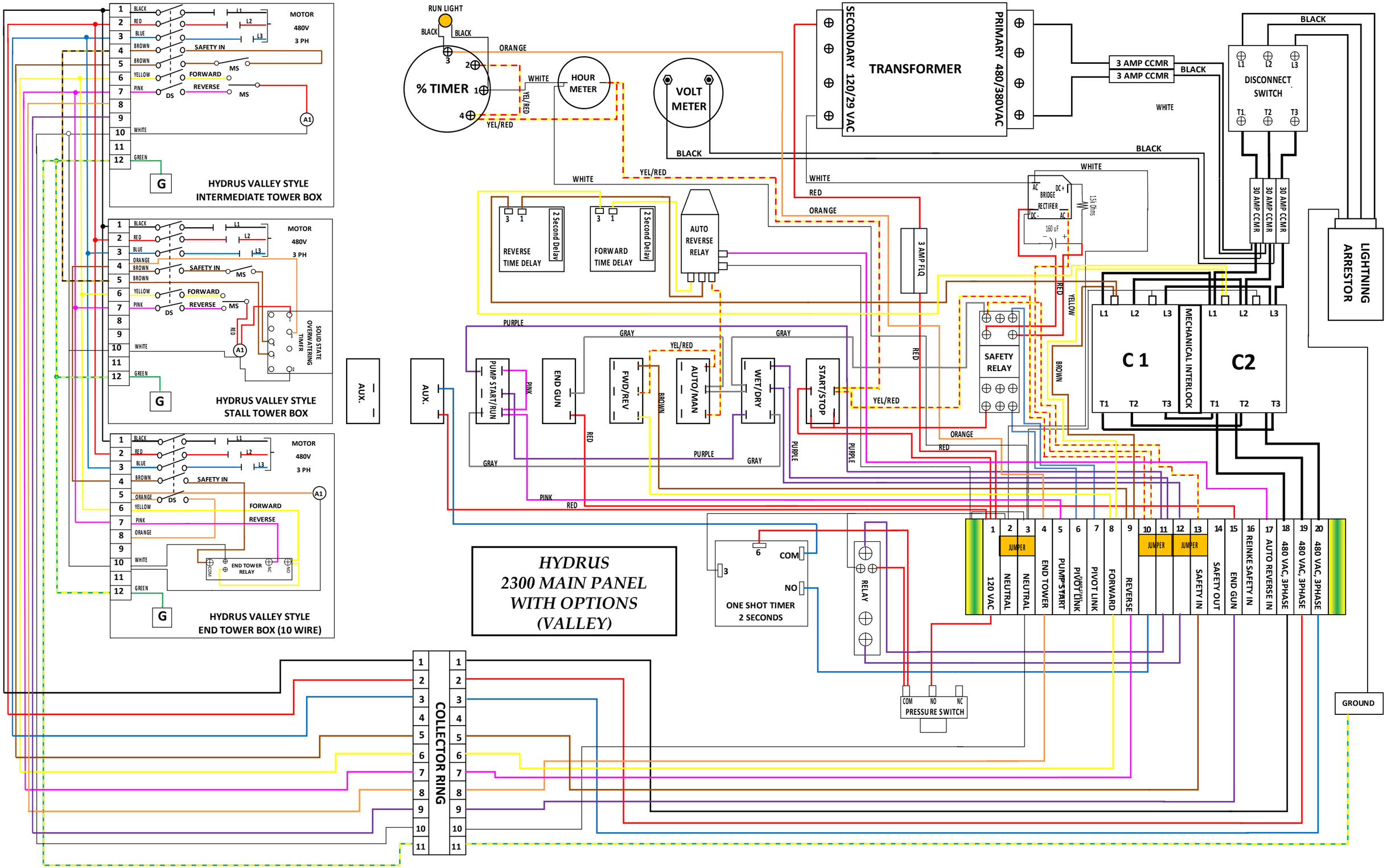
HYDRUS
2300 MAIN PANEL
WITH OPTIONS
(VALLEY)
HYDRUS VALLEY STYLE
INTERMEDIATE TOWER BOX
HYDRUS VALLEY STYLE
STALL TOWER BOX
HYDRUS VALLEY STYLE
END TOWER BOX (10 WIRE)
MOTOR
480V
3 PH
SAFETY IN
FORWARD
REVERSE
MS
DS
A1
G
SOLID STATE
OVERWATERING
TIMER
END TOWER
RELAY
COM
NC
NO
RUN LIGHT
% TIMER
HOUR
METER
VOLT
METER
TRANSFORMER
SECONDARY 120/29 VAC
PRIMARY 480/380VAC
3 AMP CCMR
DISCONNECT
SWITCH
LIGHTNING
ARRESTOR
REVERSE
TIME DELAY
FORWARD
TIME DELAY
2 Second Delay
AUTO
REVERSE
RELAY
3 AMP FLQ
BRIDGE
RECTIFIER
160 uF
30 AMP CCMR
C 1
C2
MECHANICAL INTERLOCK
SAFETY
RELAY
AUX.
PUMP START/RUN
END GUN
FWD/REV
AUTO/MAN
WET/DRY
START/STOP
ONE SHOT TIMER
2 SECONDS
RELAY
PRESSURE SWITCH
JUMPER
120 VAC
NEUTRAL
END TOWER
PUMP START
PIVOT LINK
FORWARD
REVERSE
SAFETY IN
SAFETY OUT
END GUN
REINKE SAFETY IN
AUTO REVERSE IN
480 VAC, 3PHASE
COLLECTOR RING
GROUND