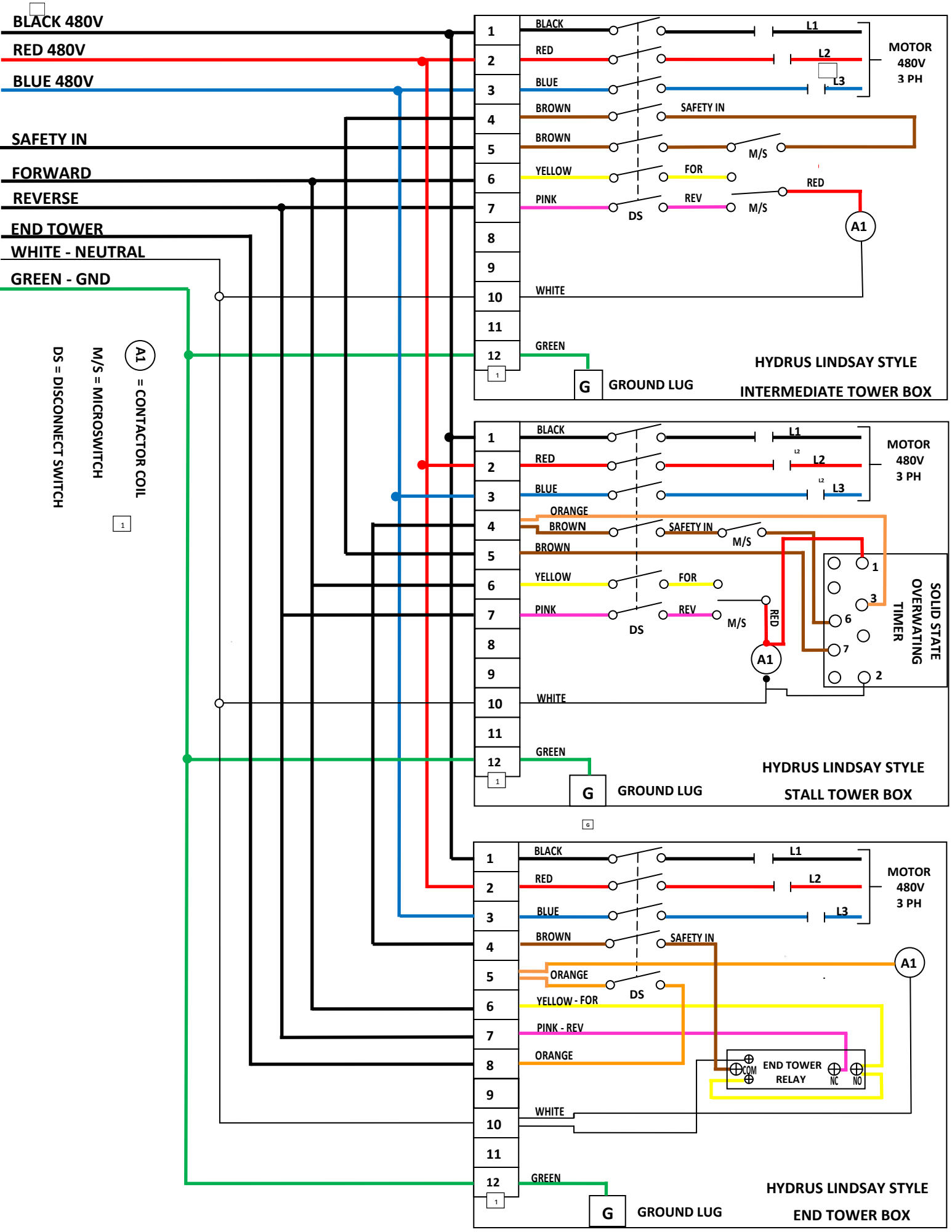
BLACK 480V
RED 480V
BLUE 480V
SAFETY IN
FORWARD
REVERSE
END TOWER
WHITE - NEUTRAL
GREEN - GND
A1 = CONTACTOR COIL
M/S = MICROSWITCH
DS = DISCONNECT SWITCH
BLACK
RED
BLUE
BROWN
SAFETY IN
BROWN
M/S
YELLOW
FOR
PINK
REV
DS
RED
A1
WHITE
GREEN
G
GROUND LUG
L1
L2
L3
MOTOR
480V
3 PH
HYDRUS LINDSAY STYLE
INTERMEDIATE TOWER BOX
ORANGE
BROWN
SAFETY IN
M/S
BROWN
YELLOW
FOR
PINK
REV
DS
M/S
RED
A1
SOLID STATE
OVERWATING
TIMER
WHITE
GREEN
G
GROUND LUG
HYDRUS LINDSAY STYLE
STALL TOWER BOX
BLACK
RED
BLUE
BROWN
SAFETY IN
ORANGE
DS
YELLOW - FOR
PINK - REV
ORANGE
A1
END TOWER
RELAY
COM
NC
NO
WHITE
GREEN
G
GROUND LUG
HYDRUS LINDSAY STYLE
END TOWER BOX